Hydraulic Performance Curves

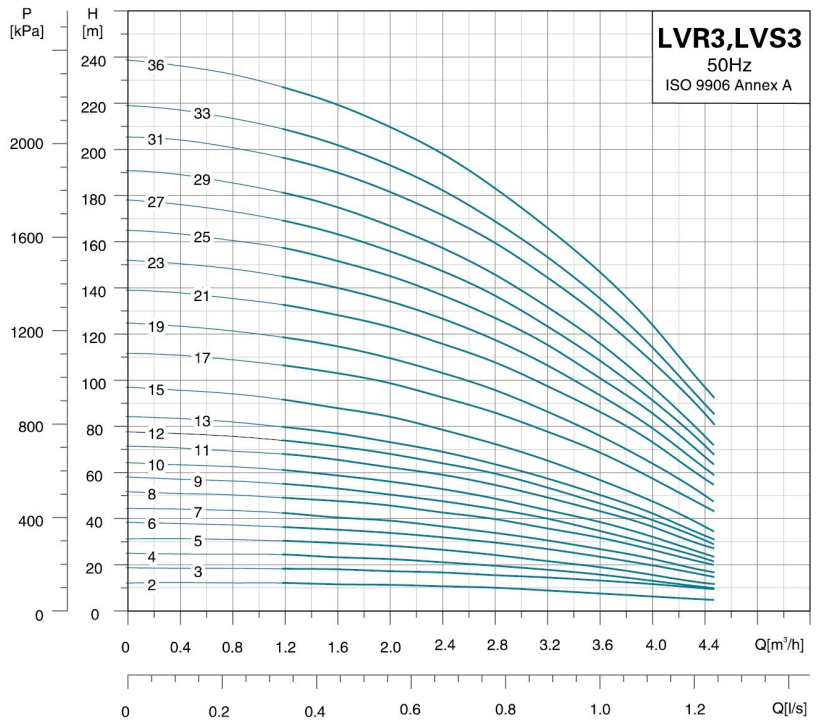

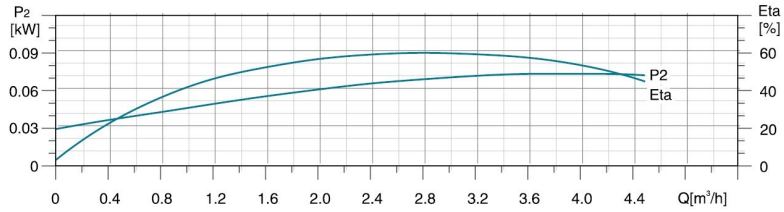

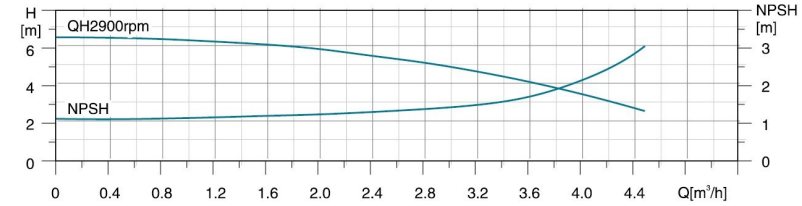

Dimension Drawing

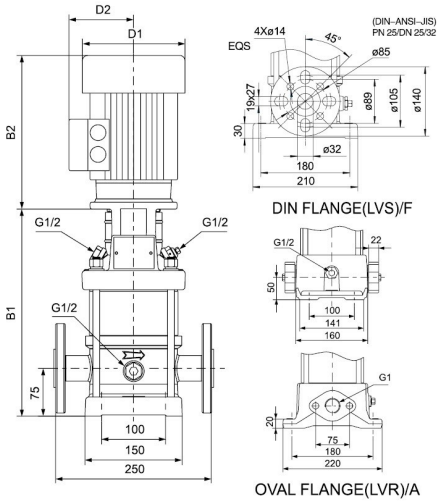

MODEL	OVAL FLANGE(LVR)		DIN FLANGE(LVS)		D1	D2
	B1	B1+B2	B1	B1+B2		
3–2	238	468	264	494	136	109
3–3	256	486	282	512	136	109
3–4	274	504	300	530	136	109
3–5	292	522	318	548	136	109
3–6	310	540	336	566	136	109
3–7	328	558	354	584	136	109
3–8	350	600	376	626	155	124
3–9	368	618	394	644	155	124
3–10	386	636	412	662	155	124
3–11	404	654	430	680	155	124
3–12	422	672	448	698	155	124
3–13	440	690	466	716	155	124
3–15	476	726	502	752	155	124
3–17	528	838	554	864	175	137
3–19	564	874	590	900	175	137
3–21	600	910	626	936	175	137
3–23	636	946	662	972	175	137
3–25	672	982	698	1008	175	137
3–27	708	1018	734	1044	175	137
3–29	744	1054	770	1080	175	137
3–31	784	1114	810	1140	195	151
3–33	820	1150	846	1176	195	151
3–36	874	1204	900	1230	195	151

Note: B1 and B1+B2 of clamp connector and threaded connector are in compliance with that of DIN flange.

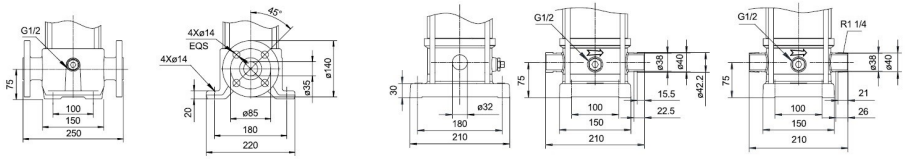

DIN FLANGE(LVR)/F THREADED CONNECTOR(LVS)/G CLAMP CONNECTOR(LVS)/K

MODEL	POWER[kW]	Q[m³/h]	1.2	1.6	2.0	2.4	2.8	3.2	3.6	4.0
3–2	0.37		13	12	12	11	11	10	8	7.5
3–3	0.37		19	19	18	17	16	15	14	12
3–4	0.37		25	24	23	22	20	19	17	14
3–5	0.37		31	31	29	27	25	24	20	17
3–6	0.55		37	36	35	33	30	28	24	21
3–7	0.55		43	40	40	37	35	32	28	24
3–8	0.75		51	48	47	44	41	38	33	28
3–9	0.75		56	54	51	48	45	42	36	30
3–10	0.75		62	60	57	54	50	46	40	33
3–11	1.1		69	66	63	60	56	51	44	38
3–12	1.1		75	72	69	65	61	56	48	41
3–13	1.1	H(m)	80	78	74	70	65	60	51	44
3–15	1.1		92	89	85	80	73	68	58	49
3–17	1.5		107	104	100	94	87	78	70	59
3–19	1.5		119	116	111	104	97	87	77	65
3–21	2.2		133	129	124	117	109	97	88	75
3–23	2.2		146	141	135	128	119	105	95	81
3–25	2.2		158	153	146	138	128	115	102	87
3–27	2.2		170	164	157	148	138	124	110	93
3–29	2.2		182	176	168	159	147	133	118	100
3–31	3.0		197	191	183	173	161	142	128	110
3–33	3.0		210	203	194	194	170	152	137	116
3–36	3.0		228	221	211	200	185	165	149	126