Dimension

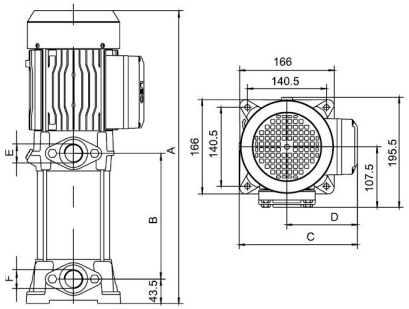

Model		Power (P2)	A	B	C	D	E	F
Single-phase	Three-phase	kW						
EVPm2-2	EVP2-2	0.37	382	120	193	110	G1	G1
EVPm2-3	EVP2-3	0.55	406	144	193	110	G1	G1
EVPm2-4	EVP2-4	0.75	430	168	193	110	G1	G1
EVPm2-5	EVP2-5	1.0	454	192	193	110	G1	G1
EVPm2-6	EVP2-6	1.0	478	216	193	110	G1	G1
EVPm2-7	EVP2-7	1.1	545	247.5	210	125	G1	G1
EVPm2-8	EVP2-8	1.5	569	271.5	210	125	G1	G1
EVPm2-9	EVP2-9	1.5	593	295.5	210	125	G1	G1

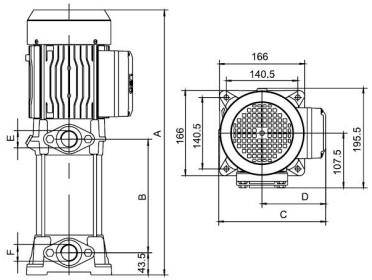

Model		Power (P2)	A	B	C	D	E	F
Single-phase	Three-phase	kW						
EVPm4-2	EVP4-2	0.55	382	120	193	110	G1	G1
EVPm4-3	EVP4-3	0.75	406	144	193	110	G1	G1
EVPm4-4	EVP4-4	1.0	430	168	193	110	G1	G1
EVPm4-5	EVP4-5	1.5	497	199.5	210	125	G1	G1
EVPm4-6	EVP4-6	1.5	521	223.5	210	125	G1	G1
—	EVP4-7	2.2	545	247.5	210	125	G1	G1
—	EVP4-8	2.2	569	271.5	210	125	G1	G1

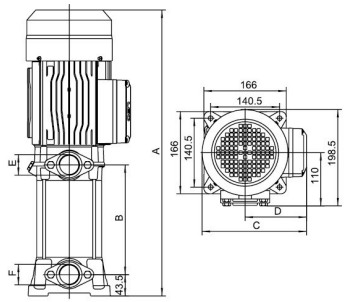

Model		Power (P2)	A	B	C	D	E	F
Single-phase	Three-phase	kW						
EVPm6-3	EVP6-3	1.1	487	190	210	125	G1¼	G1¼
EVPm6-4	EVP6-4	1.5	524	227	210	125	G1¼	G1¼
—	EVP6-5	2.2	561	264	210	125	G1¼	G1¼
—	EVP6-6	2.2	598	301	210	125	G1¼	G1¼
—	EVP6-7	3.0	685	338	221	134	G1¼	G1¼
—	EVP6-8	3.0	722	375	221	134	G1¼	G1¼

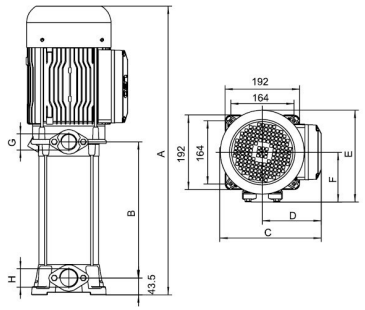

Model	Power (P2)	A	B	C	D	E	F	G	H
Three-phase	kW								
EVP10H-3	3.0	554.5	187	240	141	227.5	127.5	G1¼	G1½
EVP10H-4	4.0	577.5	220	240	141	227.5	127.5	G1¼	G1½
EVP10H-5	5.5	647	253	262	152	237.5	128.5	G1¼	G1½
EVP10H-6	5.5	680	286	262	152	237.5	128.5	G1¼	G1½
EVP10H-7	7.5	713	319	262	152	237.5	128.5	G1¼	G1½
EVP10H-8	7.5	746	352	262	152	237.5	128.5	G1¼	G1½

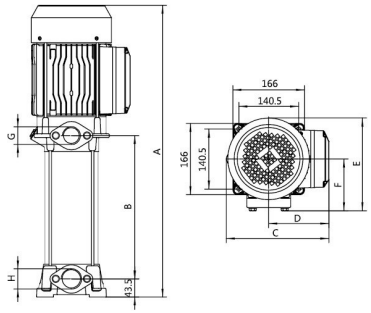

Model		P2(kW)	A	B	C	D	E	F	G	H
Single-phase	Three-phase									
EVPm6H-3	EVP6H-3	0.75	457	158.5	210	125	202	114.5	G1¼	G1½
EVPm6H-4	EVP6H-4	1.1	483.5	185	210	125	202	114.5	G1¼	G1½
EVPm6H-5	EVP6H-5	1.5	510	211.5	210	125	202	114.5	G1¼	G1½
—	EVP6H-6	2.2	536.5	238	210	125	202	114.5	G1¼	G1½
—	EVP6H-8	3.0	655	297.5	240	141	218	121.5	G1¼	G1½
—	EVP6H-10	4.0	708	350.5	240	141	218	121.5	G1¼	G1½