Data sheet: Multivert MVI 9503/2 (3~400 V, EPDM,)

Pump curves

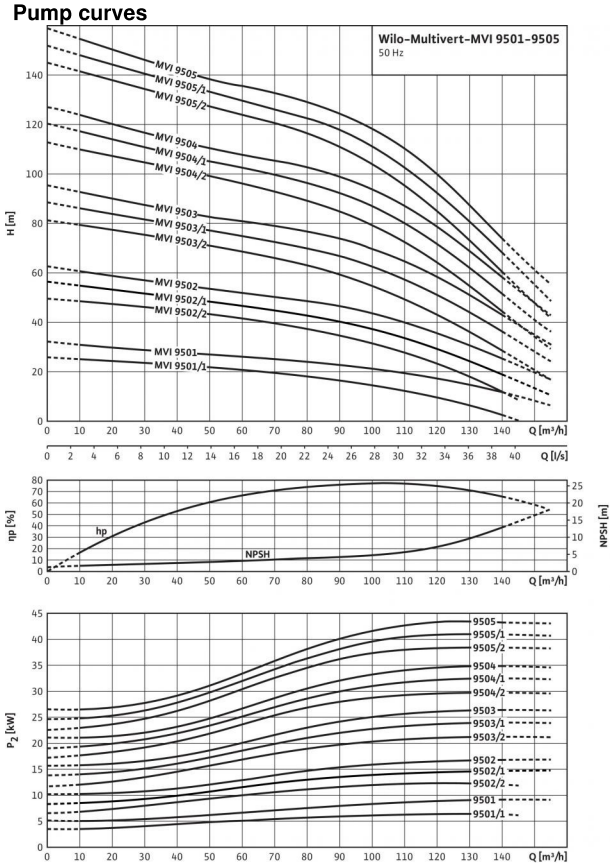

Pump curves in accordance with ISO 9906: 2012 3B

Terminal diagram

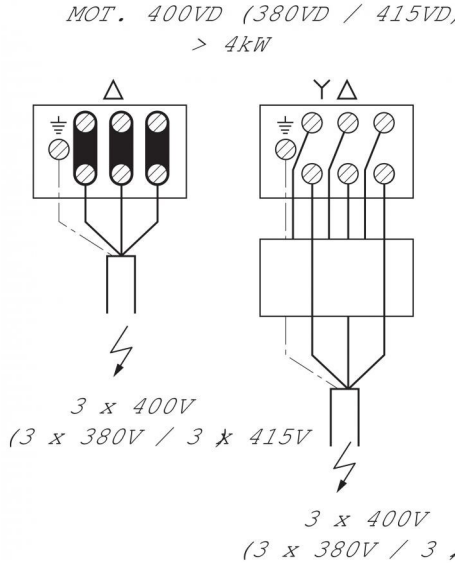

Power	
Fluid temperature *T*	-15...+120 °C
Max. ambient temperature *T*	40 °C
Maximum operating pressure p_{max}	25 bar

Minimum Efficiency Index (MEI)	
Minimum Efficiency Index (MEI)	≥ 0.40

Motor	
Insulation class	F
Protection class	IP 55
Mains connection	3~400 V, 50 Hz
Rated power P_2	22 kW
Power consumption P_1	24.25 kW
Nominal current 3~400 V, 50 Hz I_N	38 A
Motor efficiency $\eta_{m\,50\%}$	90.8 %
Motor efficiency $\eta_{m\,75\%}$	92.3 %
Motor efficiency $\eta_{m\,100\%}$	92.7 %

Connections	
Flange nominal diameter (on the pressure side)	DN 100
Flange nominal diameter (on the suction side)	DN 100
Rated pressure level (on the pressure side) *PN*	PN 25
Rated pressure level (on the suction side) *PN*	PN 25

Materials	
Impeller	1.4301 [AISI304]
Pump housing	EN-GJL-250 (cataphoretic-coated)
Pump shaft	1.4057 [AISI431]
Pump base	EN-GJL-250
Static seal	EPDM
Mechanical seal	U3BE3GG

Information for order placements	
Make	Wilo
Type	MVI 9503/2
Art no.	4082566
Weight approx. *m*	211.0 kg

• = available, - = not available

Dimensions and dimensions drawings: Multivert MVI 9503/2 (3~400 V, EPDM,)

Dimension drawing

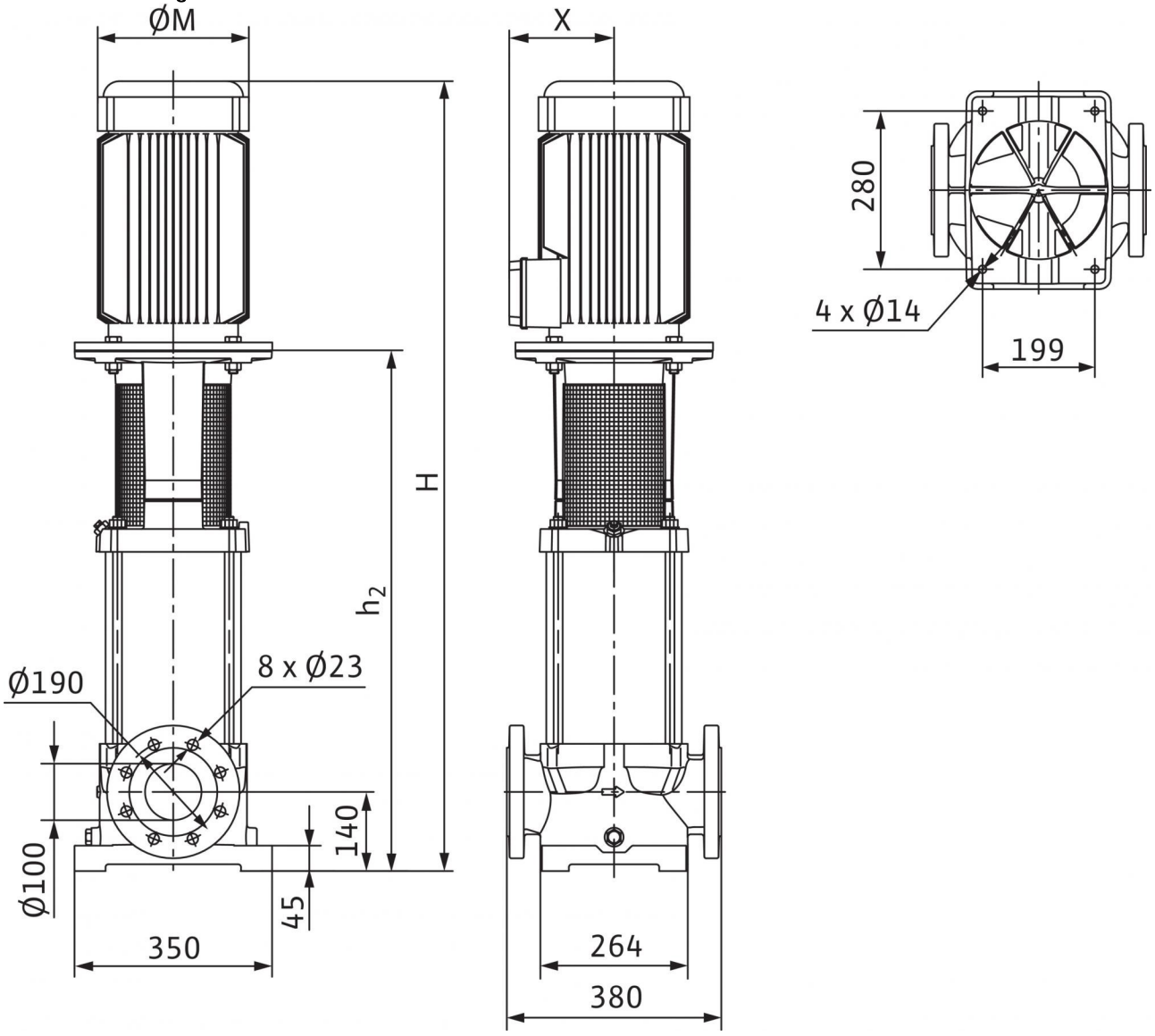

Dimensions *H*	1347 mm
Dimensions *H2*	881 mm
Dimensions *X*	200 mm
Dimensions *Ø M*	302 mm
Weight approx. *m*	211 kg

Pump curves: Multivert MVI 9503/2 (3~400 V, EPDM,)

Pump curves 2-pole, 50 Hz

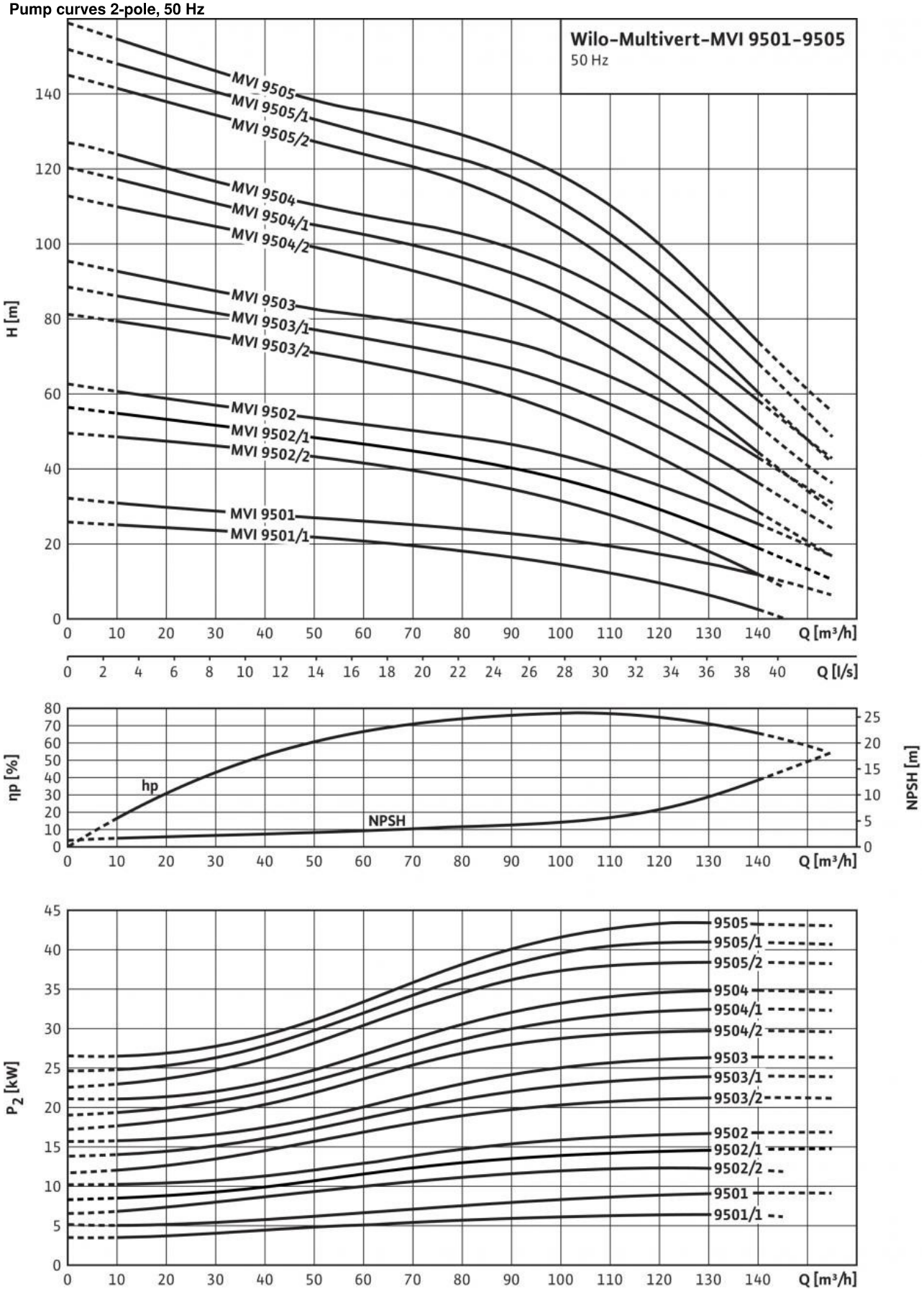

Pump curves in accordance with ISO 9906: 2012 3B

Ordering information: Multivert MVI 9503/2 (3~400 V, EPDM,)

Make	Wilo
Type	MVI 9503/2
Art no.	4082566
EAN number	4016322709138
Colour	green/silver
Minimum order quantity	1
Minimum order quantity unit	PCE
Weight (net) *kg*	211
Length (net) *mm*	439
Width (net) *mm*	350
Height (net) *mm*	1400
Weight (gross) *kg*	250
Length (gross) *mm*	1630
Width (gross) *mm*	630
Height (gross) *mm*	910
Packaging type	One-way pallet
Packaging property	Transport packaging
Pieces per pallet	1
Number per layer	1

Tender text: Multivert MVI 9503/2 (3~400 V, EPDM,)

Multistage, non self-priming, vertical high-pressure centrifugal pump in in-line design.

The pump shaft and the motor shaft of the IEC standard motor are connected by means of a clamp coupling. A separate lantern roller bearing ensures optimum admission of axial thrusts. Intermediate bearings in the hydraulics guarantee a long service life.

The pump is suitable for water supply, water distribution and pressure boosting, industrial recirculation systems, process water and cooling water circulation systems. It can also be used in fire extinguishing systems, washing systems as well as for irrigation.

Special features/product advantages

- Corrosion-resistant impellers, guide vane apparatuses and stage housings
- Drinking water approval for pumps with parts that come in contact with the fluid made of stainless steel (EPDM version)

Scope of delivery

- Wilo-Multivert MVI high-pressure multistage centrifugal pump
- Installation and operating instructions
- Counter flanges made of stainless steel of cast iron with the corresponding screws, nuts and gaskets for PN16 pump version with oval flanges

Design notes

- Motor protection is to be provided on request or onsite.
- Single-phase AC motor equipped with built-in thermal motor protection and capacitor
- The spacer coupling (from ≥ 15 kW) allows the mechanical seal to be replaced without removing the motor
- Counter flanges are available as accessories.
- Bypass sets are available as accessories.

Power

Fluid temperature *T*: -15...+120 °C
Max. ambient temperature *T*: 40 °C
Maximum operating pressure p_{max}: 25 bar

Minimum Efficiency Index (MEI)

Minimum Efficiency Index (MEI): ≥ 0.40

Motor

Insulation class: F
Protection class: IP 55
Mains connection: 3~400 V, 50 Hz
Rated power P_2: 22 kW
Power consumption P_1: 24.25 kW
Nominal current 3~400 V, 50 Hz I_N: 38 A
Motor efficiency $\eta_{m\,50\%}$: 90.8 %
Motor efficiency $\eta_{m\,75\%}$: 92.3 %
Motor efficiency $\eta_{m\,100\%}$: 92.7 %

Connections

Flange nominal diameter (on the pressure side): DN 100
Flange nominal diameter (on the suction side): DN 100
Rated pressure level (on the pressure side) *PN*: PN 25
Rated pressure level (on the suction side) *PN*: PN 25

Materials

Impeller: 1.4301 [AISI304]
Pump housing: EN-GJL-250 (cataphoretic-coated)
Pump shaft: 1.4057 [AISI431]
Pump base: EN-GJL-250
Static seal: EPDM
Mechanical seal: U3BE3GG

Information for order placements

Make: Wilo
Type: MVI 9503/2
Art no.: 4082566
Weight approx. *m*: 211.0 kg